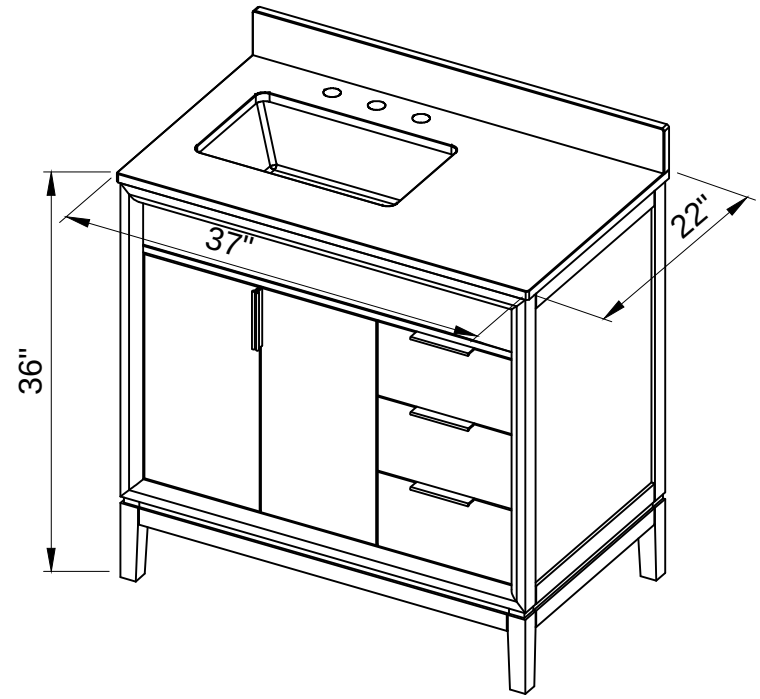

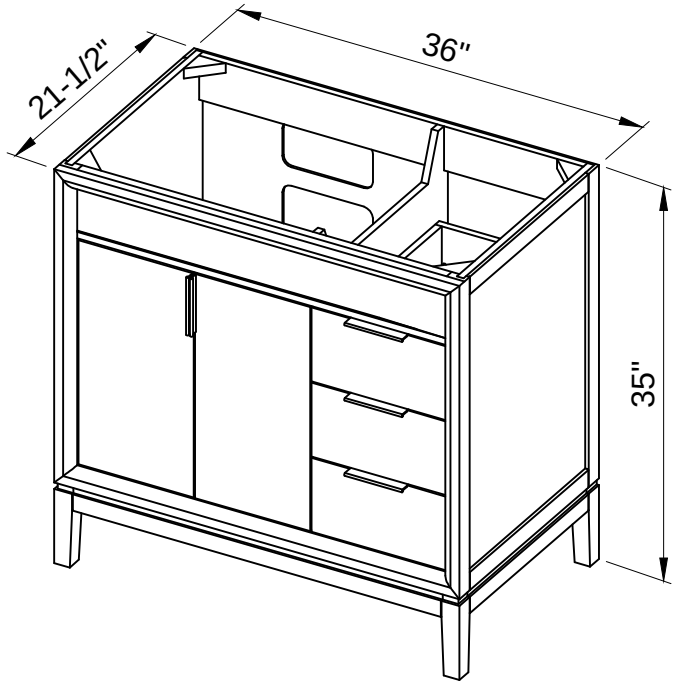

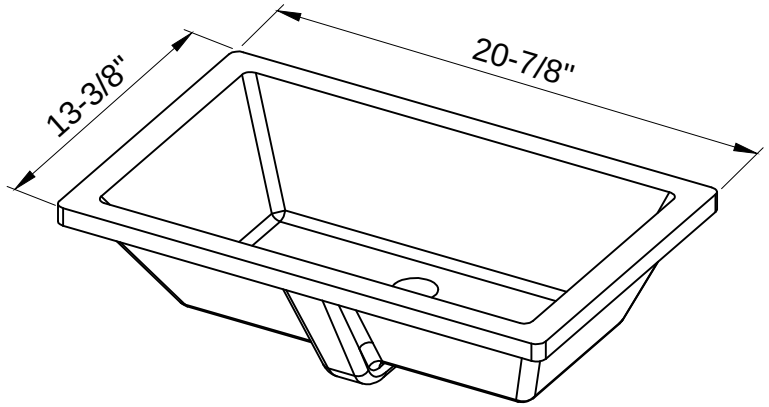

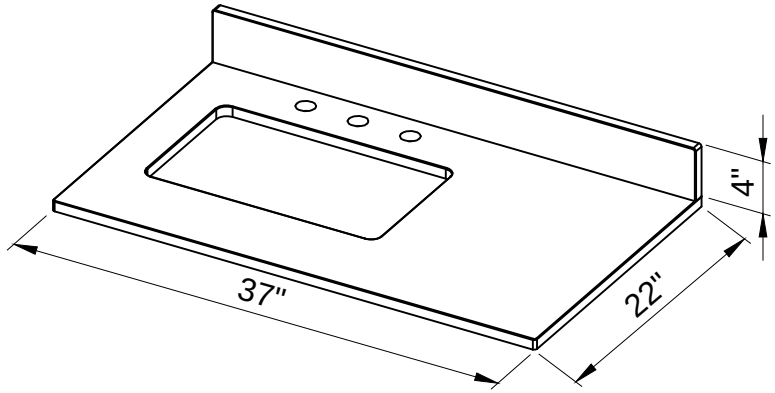

Material	Thickness	Material	Thickness
Calacatta Vienna Quartz	18mm	White Carrara Marble	25mm
Calacatta Black Quartz	18mm	Black Granite	25mm
Grey Quartz	18mm	Steel Grey - Cultured Marble	25mm
Grey Marble	18mm	Arctic Stone - Cultured Marble	25mm
Blue Limestone	25mm	Boulder - Cultured Marble	25mm